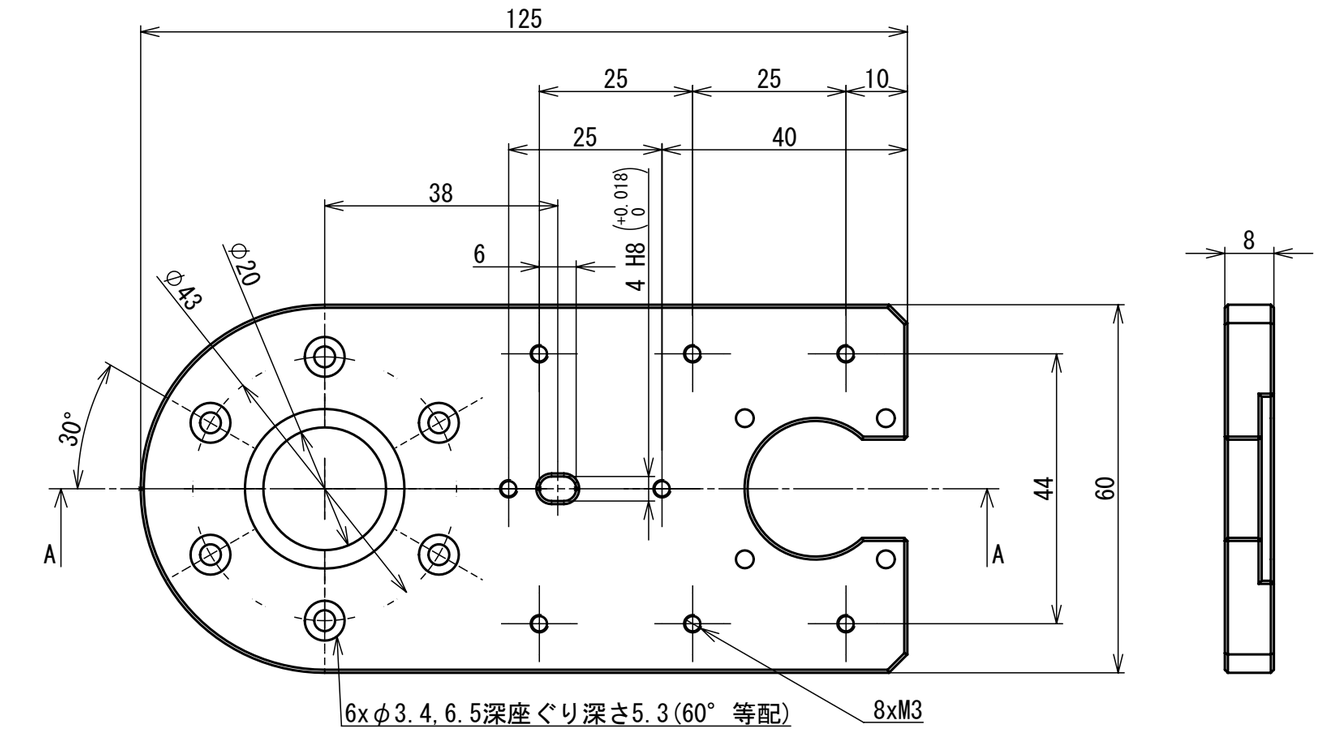
125
25
25
10
25
40
38
6
4 H8 (+0.018 0)
φ43
φ20
30°
A
A
44
60
8
6xφ3.4,6.5深座ぐり深さ5.3(60° 等配)
8xM3

A-A

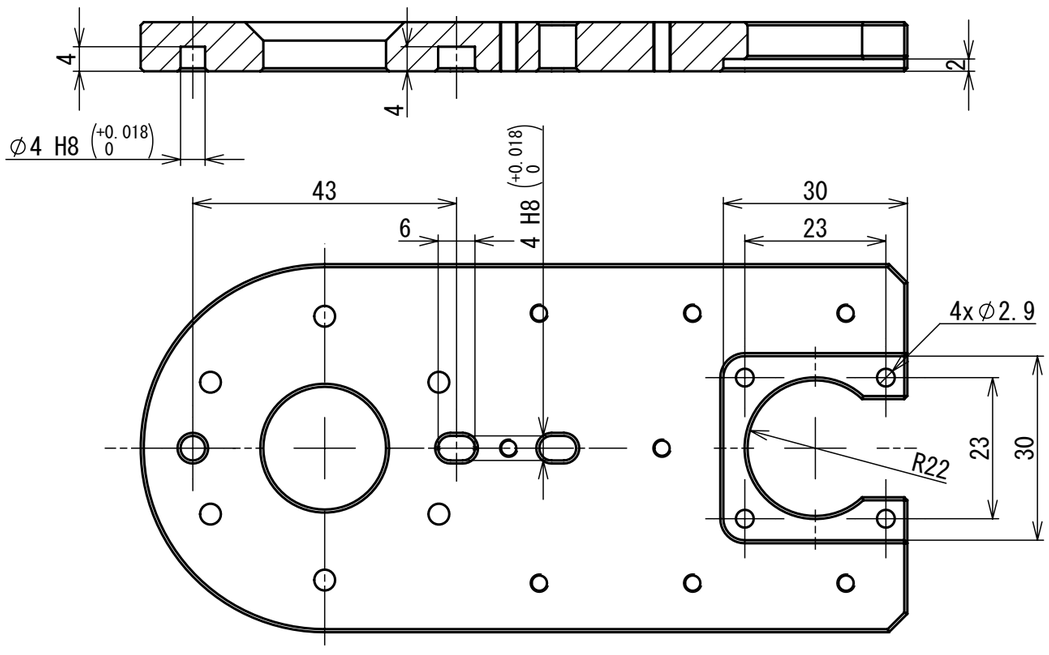
4
4
2
φ4 H8 (+0.018 0)
4 H8 (+0.018 0)
43
6
30
23
4xφ2.9
R22
23
30